SERVICE MANUAL

FISHER

STEREO HIGH FIDELITY
SYSTEM

PH-W3000K

(EUROPE)

142 516 08

SPECIFICATIONS

Power Source
- AC 120V/220V
- DC 12V
  (UM-1, HP2, D Cell, Monozelle, R20)x8

Max. Output Power 4.5Wx2
Power Consumption 24W
Current Consumption (at Vol. Min.)
- Record mode 210mA
- Playback mode 210mA
- Fast Forward mode 250mA
- Rewind mode 250mA

Recording System ..... AC Bias
Erasing System ..... AC Erasing
Tape Speed ..... 1-7/8ips. ±3%
Wow & Flutter ..... 0.15% (WRMS)
Torque
- Playback ..... 30 ~ 55g-cm
- Fast Forward/Rewind ..... 55 ~ 120g-cm

Fast Forward/Rewind Time ..... 120sec. (with C-60)
Frequency Response (Overall)
- Fe_2O_3 ..... 100Hz ~ 12,500Hz

Erase Ratio (Overall, with Fe_2O_3) 60dB
Signal to Noise Ratio (with Fe_2O_3) 40dB
Crosstalk (with Fe_2O_3)
- Track to Track 50dB

Channel Separation (with Fe_2O_3) 30dB
Harmonic Distortion (K3/with Fe_2O_3) 3%
Hum & Noise (at Vol. Min.) ..... −60dBs
Oscillation frequency 85kHz
Output Level and Impedance
- Headphones 32Ω

Frequency Range
- MW ..... 531 ~ 1,602kHz
- SW_1 ..... 2.3 ~ 7.5MHz
- SW_2 ..... 7.5 ~ 24MHz
- FM ..... 87.5 ~ 108MHz

− Specifications and design are subject to change without notice. −

REFERENCE No. WM-570555

Fisher PH W 3000 K GFGF Archiv

SCHEMATIC DIAGRAM (Tuner)

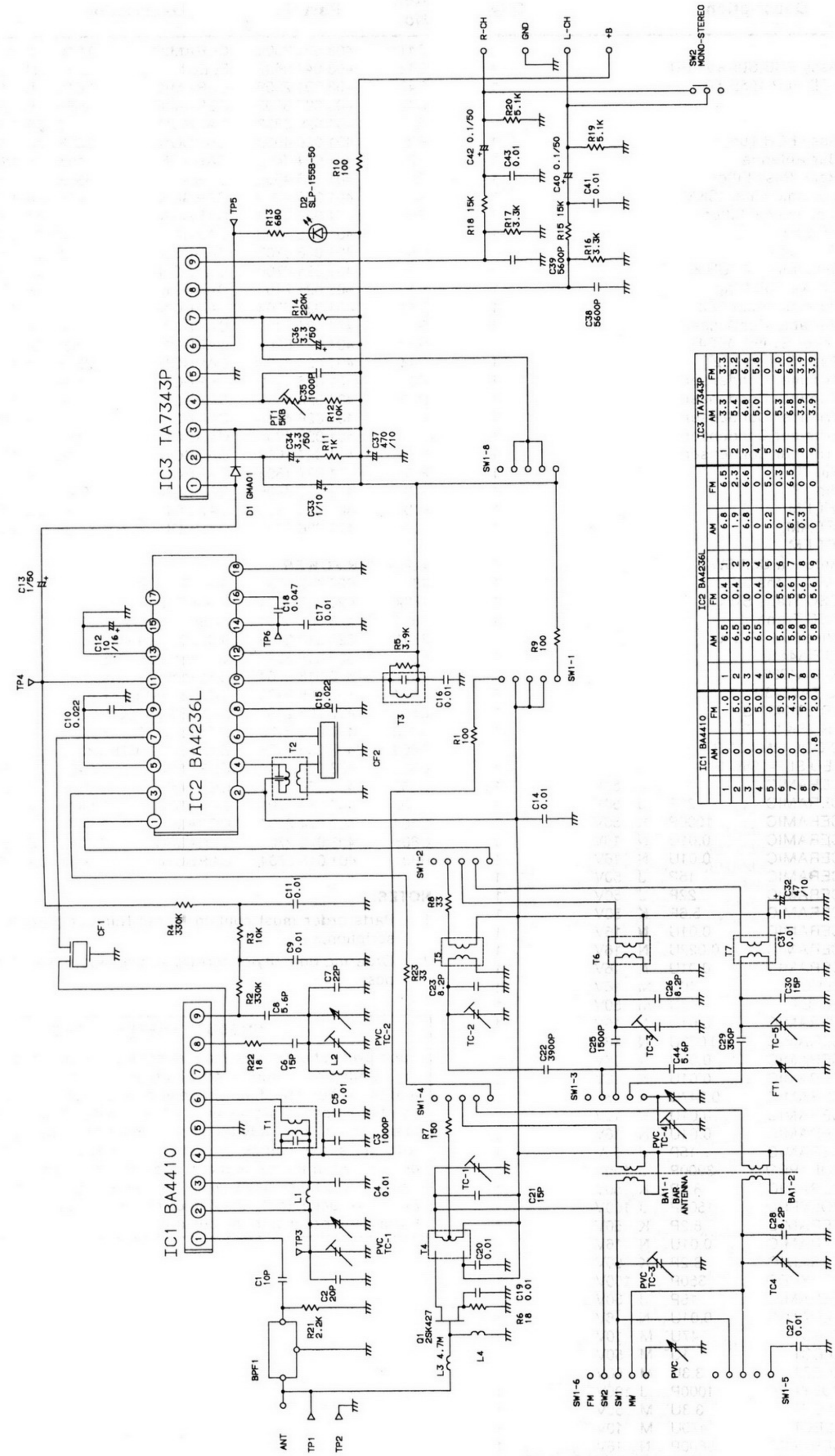

IC3 TA7343P		
	AM	FM
1	3.3	3.3
2	5.4	5.2
3	6.8	6.6
4	5.0	5.8
5	0	0
6	5.3	6.0
7	6.8	6.0
8	3.9	3.9
9	3.9	3.9

IC2 BA4236L		
	AM	FM
1	6.8	6.5
2	1.9	2.3
3	6.8	6.6
4	0	0
5	5.2	5.0
6	0	0.3
7	6.7	6.5
8	0.3	0
9	0	0

IC1 BA4410		
	AM	FM
1	0	1.0
2	0	5.0
3	0	5.0
4	0	5.0
5	0	0
6	0	5.0
7	0	4.3
8	0	5.0
9	1.8	2.0

Fisher PH W 3000 K GFGF Archiv

SCHEMATIC DIAGRAM (An

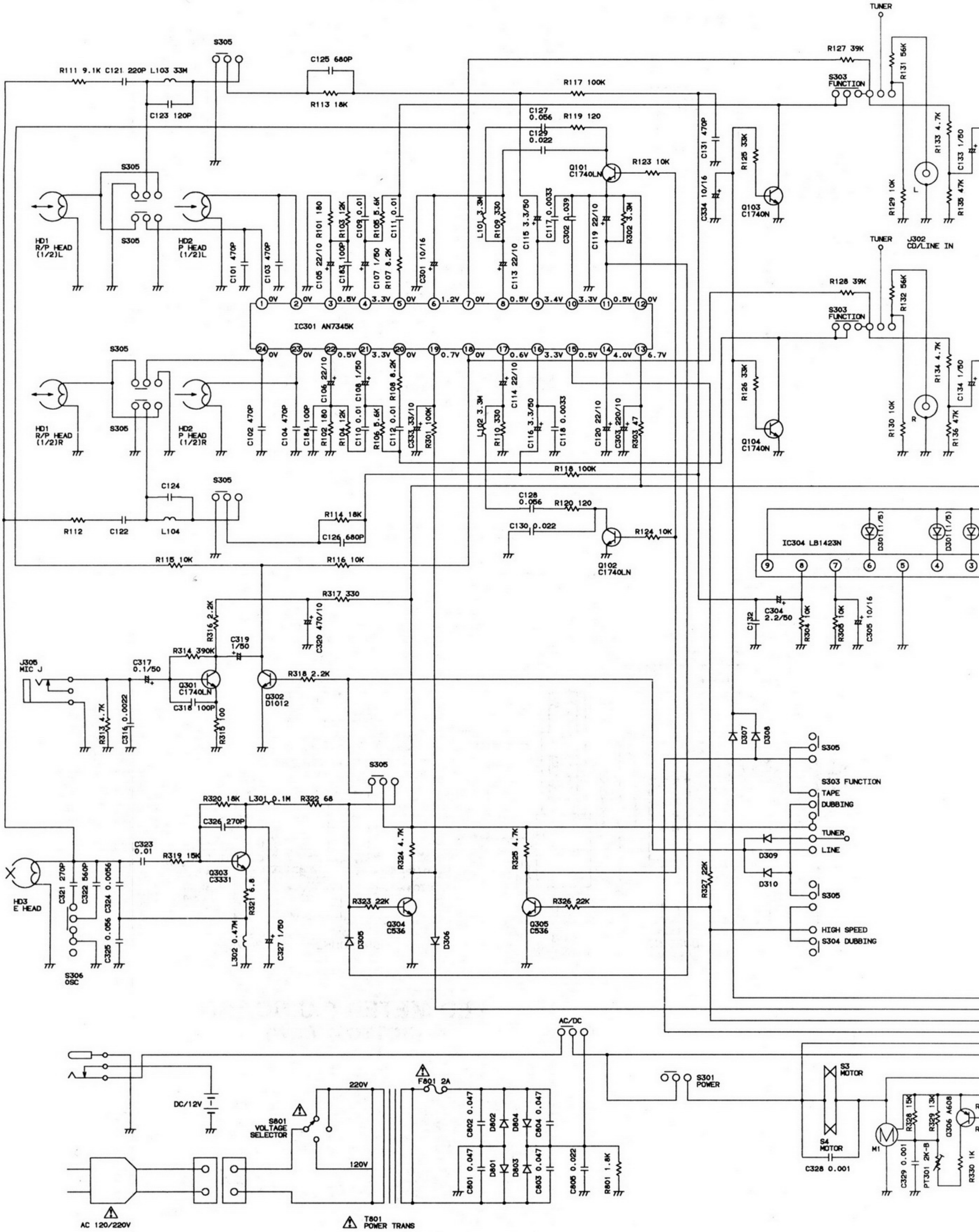

Fisher PH W 3000 K GFGF Archiv

RAM (Amplifier)

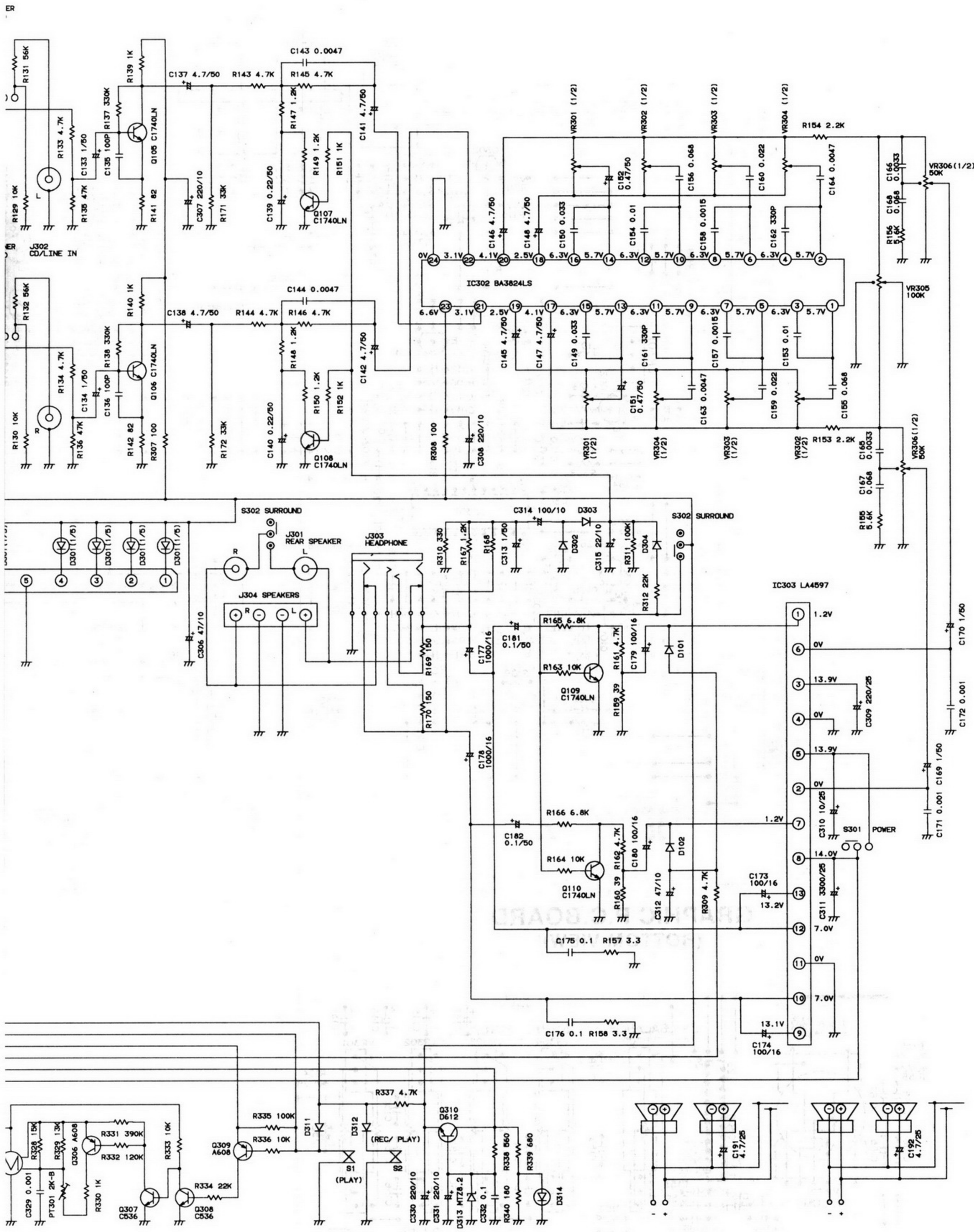

Fisher PH W 3000 K GFGF Archiv