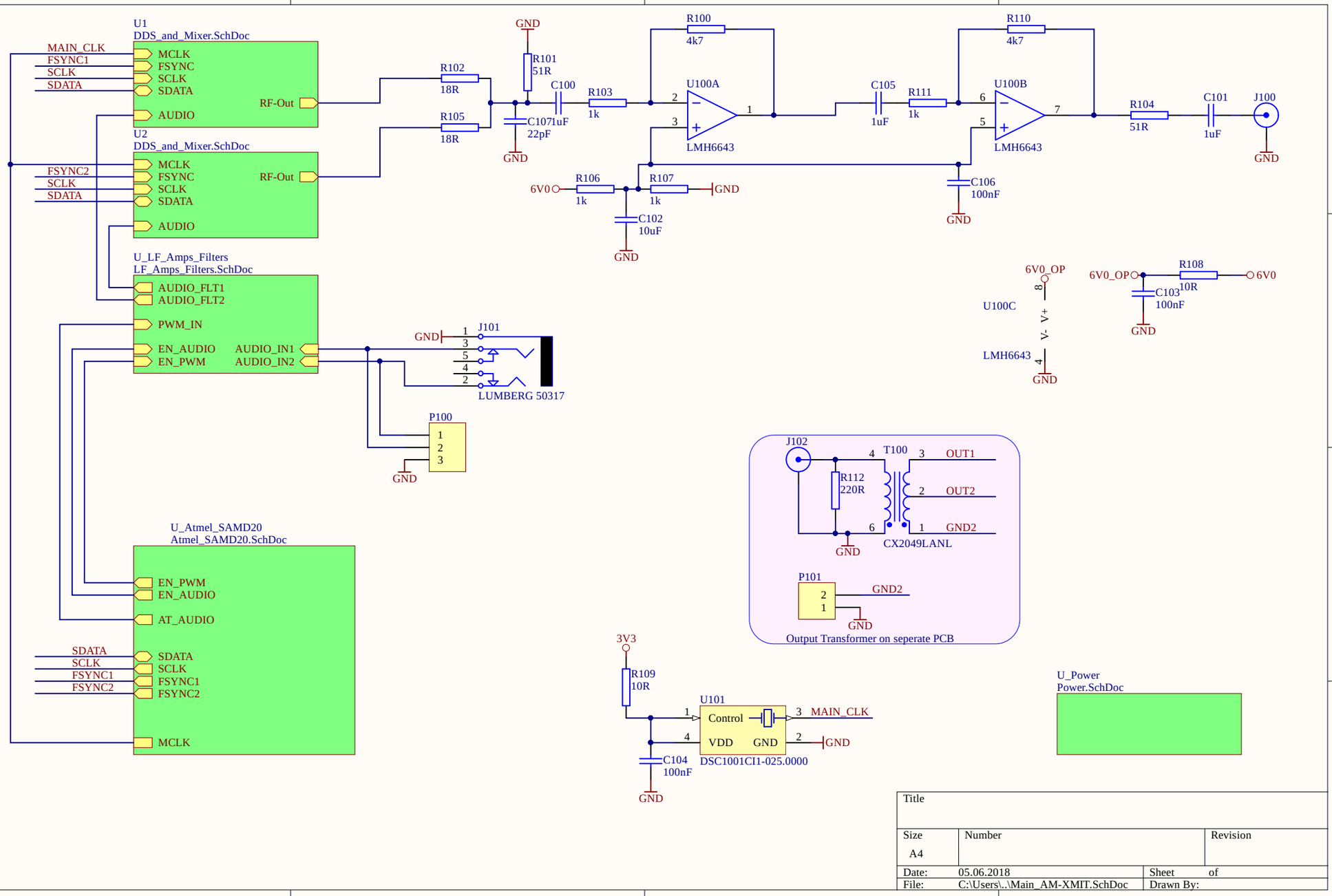
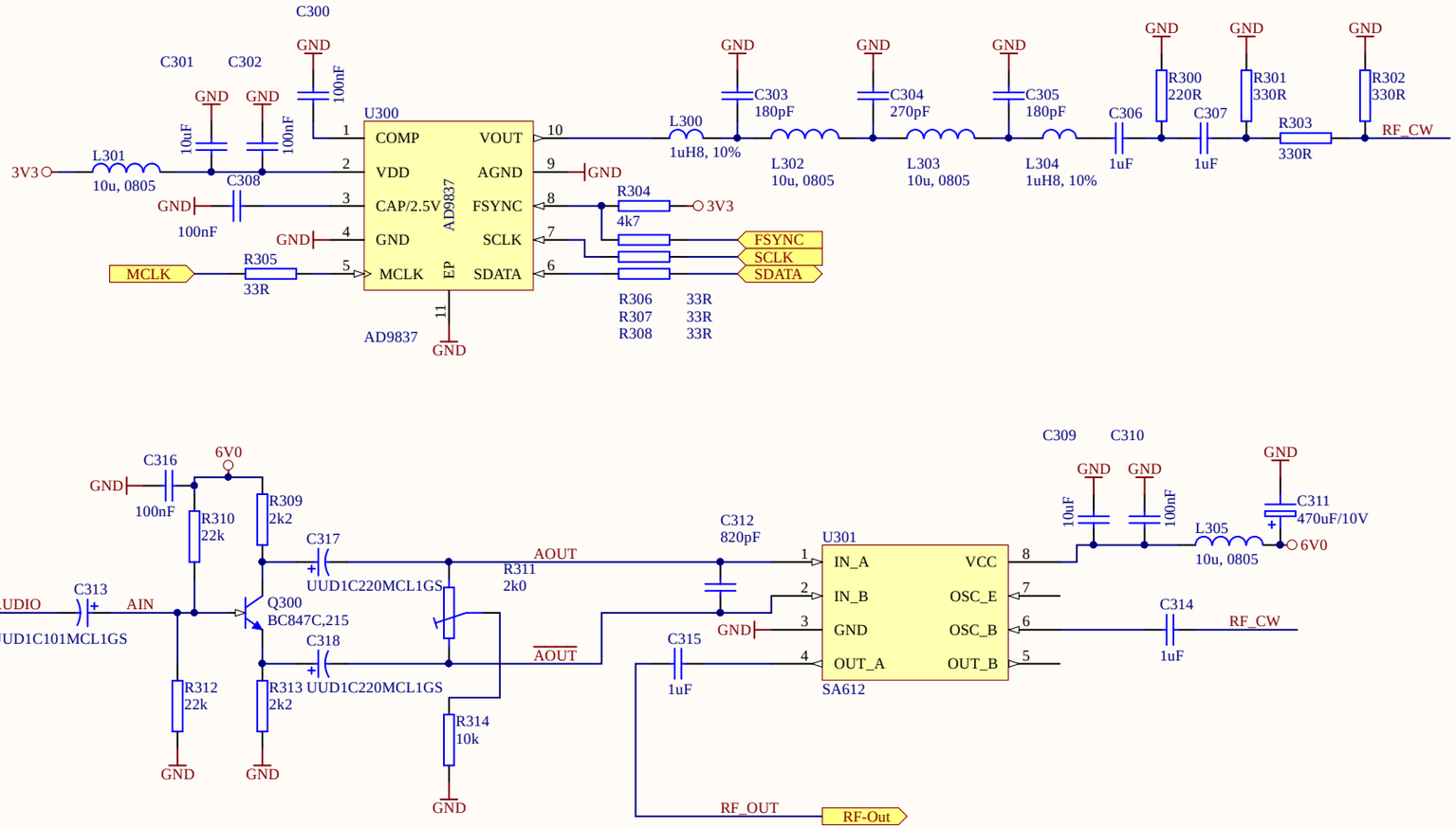
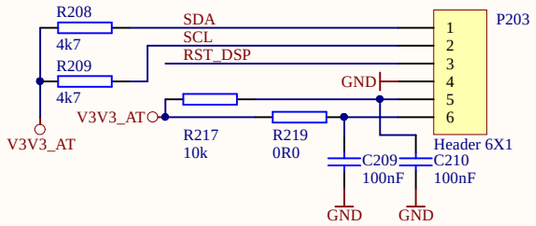
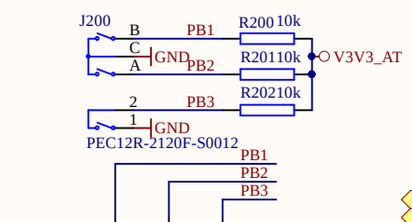
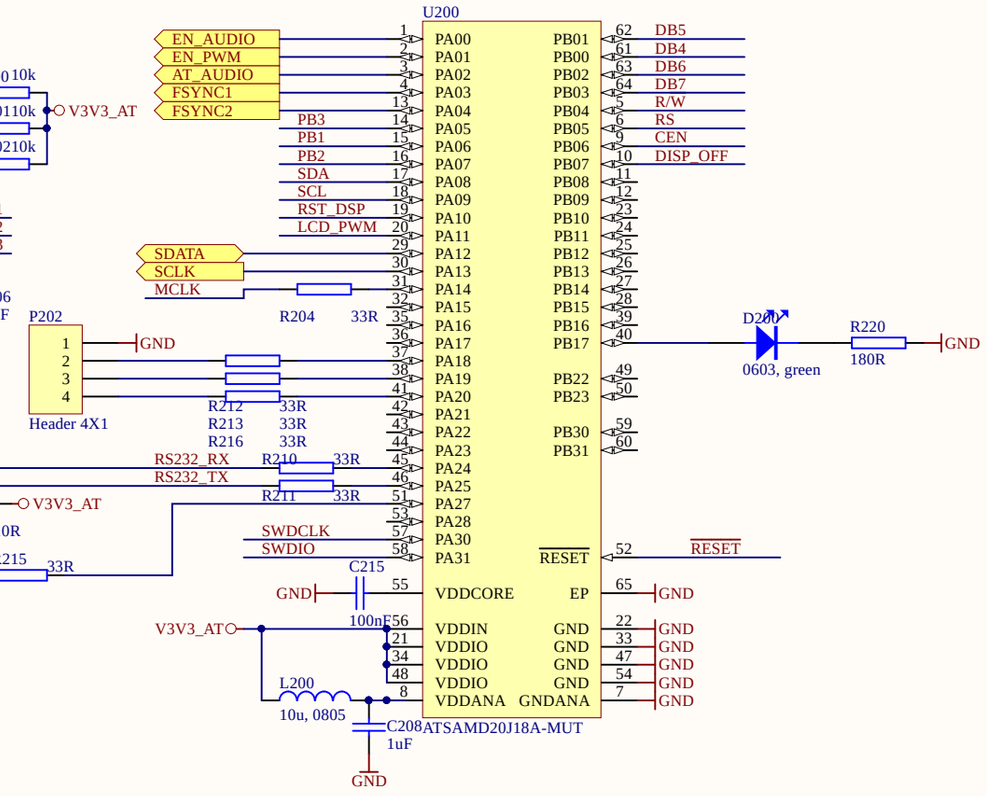

U1
DDS_and_Mixer.SchDoc
MAIN_CLK
FSYNC1
SCLK
SDATA
MCLK
FSYNC
SCLK
SDATA
AUDIO
RF-Out
U2
DDS_and_Mixer.SchDoc
FSYNC2
SCLK
SDATA
MCLK
FSYNC
SCLK
SDATA
AUDIO
RF-Out
R102
18R
R105
18R
GND
R101
51R
C100
C107
1uF
22pF
R103
1k
R100
4k7
U100A
LMH6643
C105
1uF
R111
1k
R110
4k7
U100B
LMH6643
R104
51R
C101
1uF
J100
GND
6V0
R106
1k
R107
1k
GND
C102
10uF
GND
C106
100nF
GND
U_LF_Amps_Filters
LF_Amps_Filters.SchDoc
AUDIO_FLT1
AUDIO_FLT2
PWM_IN
EN_AUDIO
EN_PWM
AUDIO_IN1
AUDIO_IN2
GND
J101
LUMBERG 50317
P100
GND
U100C
LMH6643
6V0_OP
V+
V-
GND
6V0_OP
R108
10R
C103
100nF
6V0
GND
U_Atmel_SAMD20
Atmel_SAMD20.SchDoc
EN_PWM
EN_AUDIO
AT_AUDIO
SDATA
SCLK
FSYNC1
FSYNC2
MCLK
SDATA
SCLK
FSYNC1
FSYNC2
J102
T100
R112
220R
OUT1
OUT2
GND2
CX2049LANL
GND
P101
GND2
GND
Output Transformer on seperate PCB
3V3
R109
10R
U101
Control
VDD
GND
MAIN_CLK
GND
DSC1001CI1-025.0000
C104
100nF
GND
U_Power
Power.SchDoc
Title
Size
A4
Number
Revision
Date:
05.06.2018
Sheet
of
File:
C:\Users\..\Main_AM-XMIT.SchDoc
Drawn By:

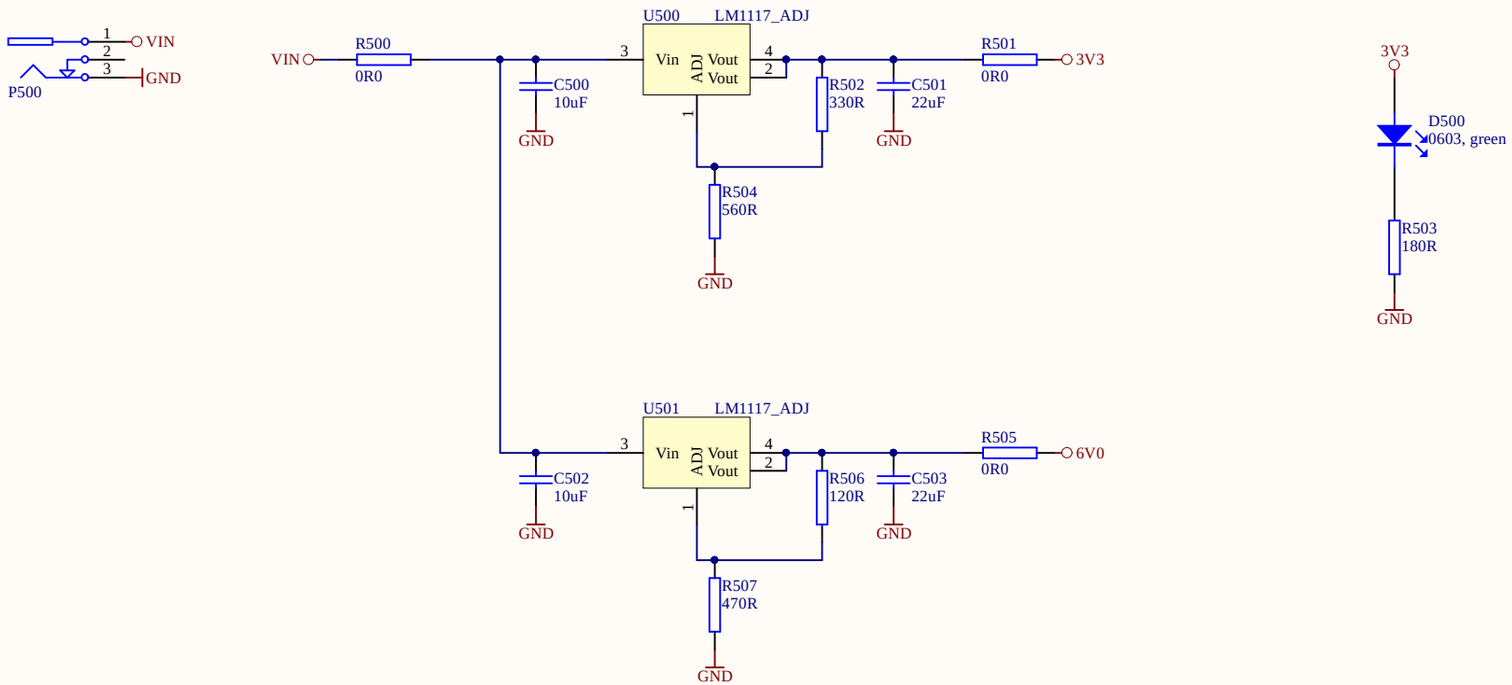


Title		
Size: A4	Number	Revision
Date: 05.06.2018		Sheet of
File: C:\Users\..\DDS_and_Mixer.SchDoc		Drawn By:

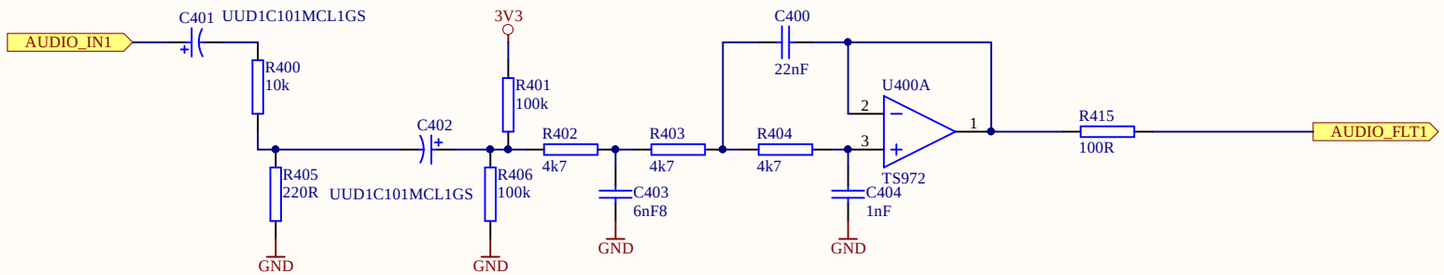


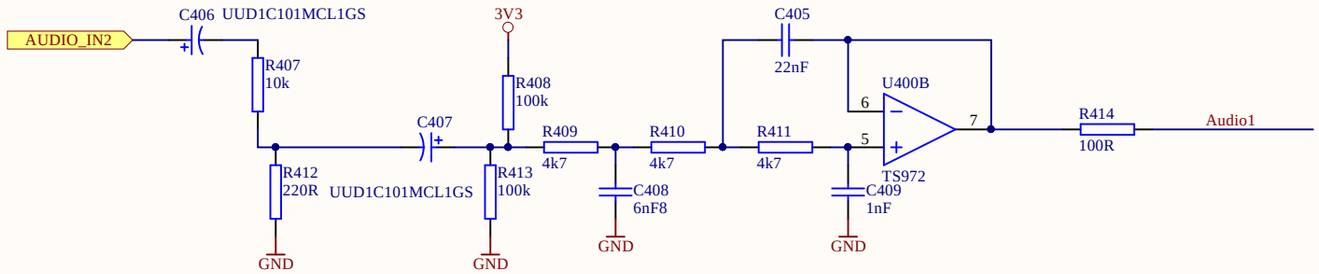


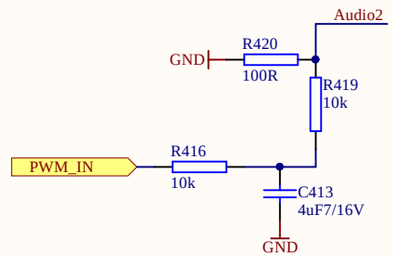

U200
EN_AUDIO
EN_PWM
AT_AUDIO
FSYNC1
FSYNC2
PB3
PB1
PB2
SDA
SCL
RST_DSP
LCD_PWM
SDATA
SCLK
MCLK
R204
33R
P202
1
2
3
4
GND
Header 4X1
R212
R213
R216
33R
33R
33R
P200
1
2
3
4
GND
RS232_RX
RS232_TX
V3V3_AT
Header 4X1
R214
10R
R210
33R
R211
33R
MCLK
MCLK
R215
33R
SWDCLK
SWDIO
C215
100nF
GND
V3V3_AT
L200
10u, 0805
C208
1uF
GND
PA00
PA01
PA02
PA03
PA04
PA05
PA06
PA07
PA08
PA09
PA10
PA11
PA12
PA13
PA14
PA15
PA16
PA17
PA18
PA19
PA20
PA21
PA22
PA23
PA24
PA25
PA27
PA28
PA30
PA31
VDDCORE
VDDIN
VDDIO
VDDIO
VDDIO
VDDANA
PB01
PB00
PB02
PB03
PB04
PB05
PB06
PB07
PB08
PB09
PB10
PB11
PB12
PB13
PB14
PB15
PB16
PB17
PB22
PB23
PB30
PB31
RESET
EP
GNDANA
GND
GND
GND

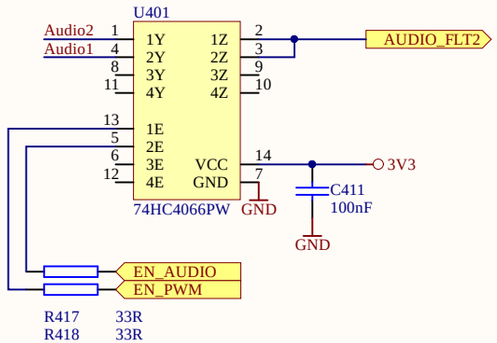


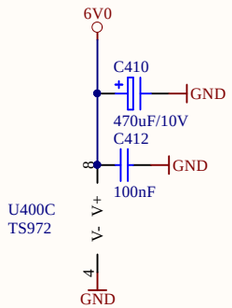
Title		
Size: A4	Number	Revision
Date: 05.06.2018		Sheet of
File: C:\Users\..\Power.SchDoc		Drawn By:



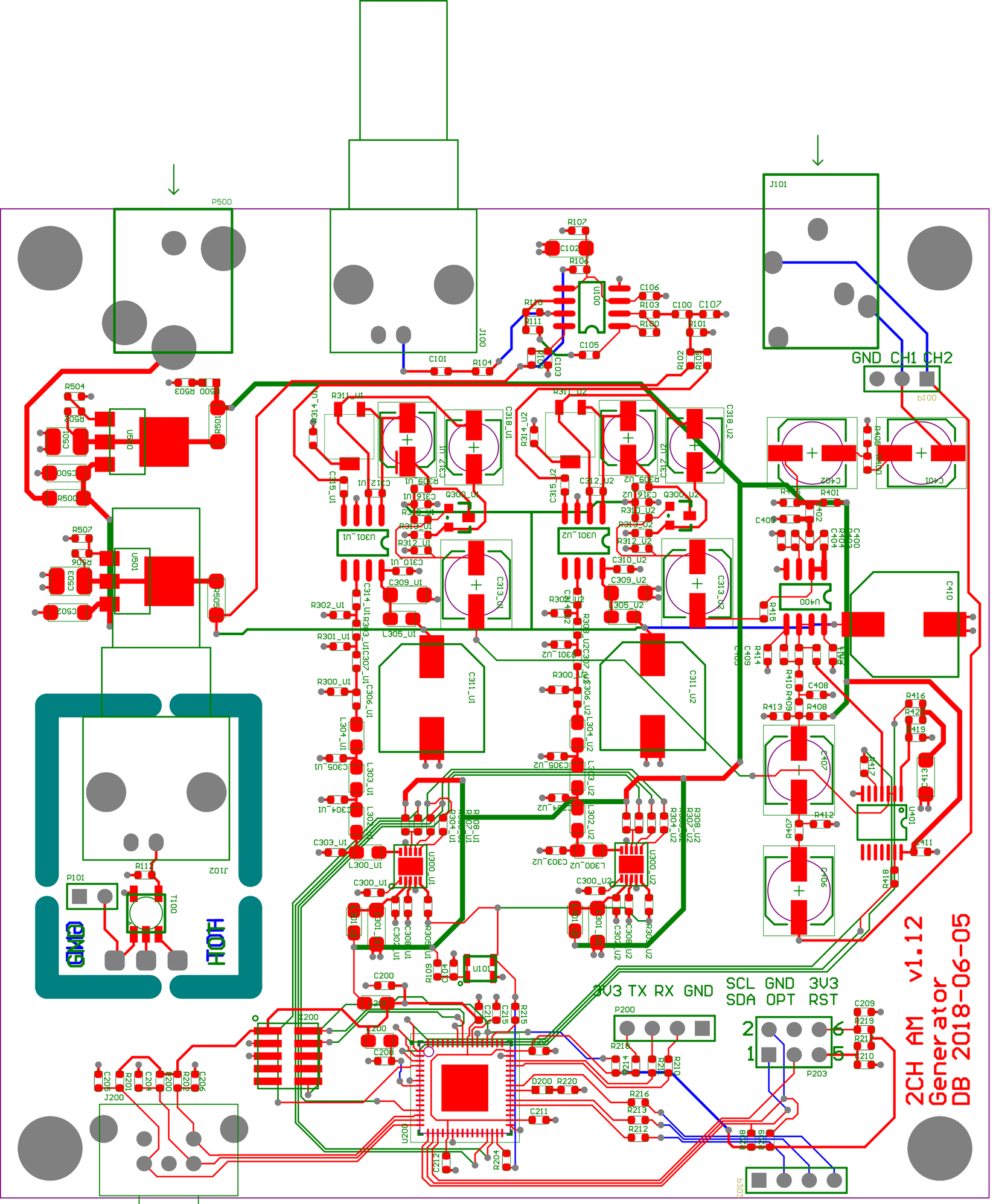


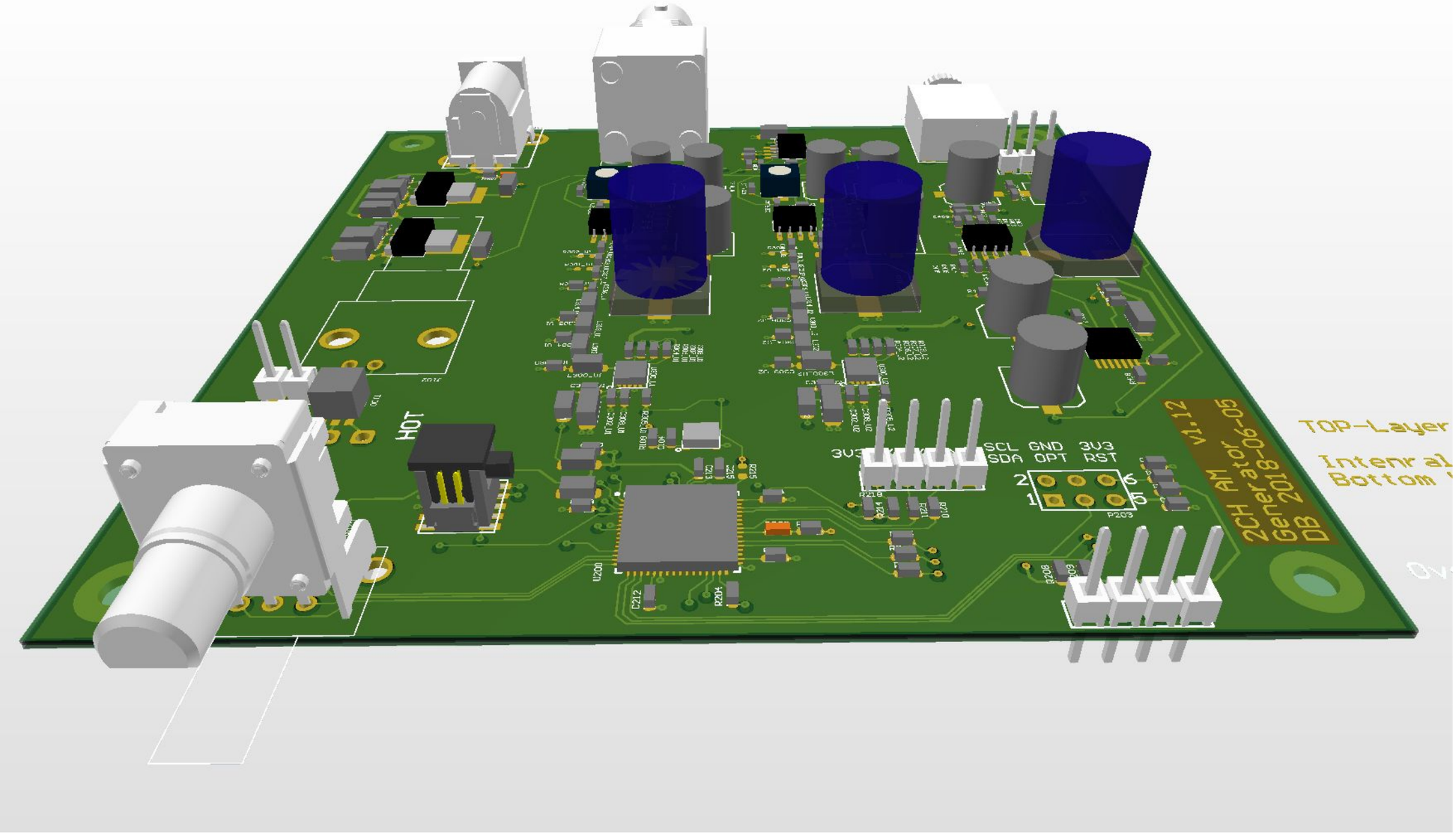






Title		
Size: A4	Number	Revision
Date: 05.06.2018		Sheet of
File: C:\Users\..\LF_Amps_Filters.SchDoc		Drawn By:


P500
J101
J100
GND CH1 CH2
R107
C102
R106
C106
R110
R103
C100
C107
R111
R150
R101
C105
C101
R104
R102
R108
C103
R504
R503
R502
R501
C501
U500
C500
R500
R507
R506
C503
C502
R505
U501
R314_U1
R311_U1
C318_U1
C312_U1
C315_U1
C316_U1
R309_U1
Q300_U1
R310_U1
R313_U1
R312_U1
U301_U1
C310_U1
C309_U1
C313_U1
L305_U1
R302_U1
C314_U1
R303_U1
C307_U1
R301_U1
C306_U1
R300_U1
L304_U1
C305_U1
L303_U1
C304_U1
L302_U1
R304_U1
R308_U1
R307_U1
C303_U1
L300_U1
U300_U1
C300_U1
C301_U1
C302_U1
R305_U1
R309
C104
U101
R314_U2
R311_U2
C318_U2
C312_U2
C315_U2
C316_U2
R309_U2
Q300_U2
R310_U2
R313_U2
R312_U2
U301_U2
C310_U2
C309_U2
C313_U2
L305_U2
R302_U2
C314_U2
R303_U2
C307_U2
R301_U2
C306_U2
R300_U2
L304_U2
C305_U2
L303_U2
C304_U2
L302_U2
R304_U2
R308_U2
R307_U2
C303_U2
L300_U2
U300_U2
C300_U2
C301_U2
C302_U2
R305_U2
C311_U1
C311_U2
R402
R401
C402
C401
C403
U400
C410
R415
C409
R414
R411
R410
C408
R409
R408
R413
R416
R420
R419
C413
R417
C407
R412
R407
C406
U401
C411
R418
P101
R111
T100
J102
GND
HOT
C200
X200
C208
C209
C210
C211
C212
C213
C214
C215
R215
R214
R213
R212
R210
R211
R209
R208
R207
R206
R205
R204
R203
R202
R201
C206
C205
C204
C203
C202
C201
J200
U200
P200
P203
D200 R220
3V3 TX RX GND
SCL GND 3V3
SDA OPT RST
2CH AM Generator v1.12
DB 2018-06-05
TOP-Layer
Intenral Layer 1
Bottom Layer
Contour (Mech)
Milling (Mech)
Overlay


HOT
SCL GND 3V3
SDA OPT RST
P203
U200
C212
R204
TOP-Layer
2CH AM Generator
DB 2018-09-05
v1.12

Bill of Materials

<Parameter Title not found>

Source Data From: AM-Sender_DDS_PcPcb
Project: AM-Sender_DDS_PcPcb
Variant: Standard
Version: <Parameter version not found>
Revision: <Parameter revision not found>
PLB: <Parameter PLB not found>
Datecode: <Parameter date not found>
Creation Date: 26.06.2018 23:52:12
Print Date: 3.08.2018 23:52

SYMEO ABSOLUTE POSITIONING

Comment	Description	Designator	Footprint	PCBcolumn Name Error Remark	MouserPartnumber	Hersteller	MouserPartNumFlag	DistiStock1	DistiStock1	DistiStock2	DistiStock2	DistiStock3	DistiStock3	Quantity Multiplier	Quantity
1uF	MLCC, X7R, 16V, 10%, 0603	C100, C101, C105, C308, C309, U1, C306, U2, C307, U3, C307_U2, C314, U3, C314, U2, C316, U1, C316, U2	0603					with same specifications	Digikey	587-1341-1-ND				1	12
10uF	MLCC, 1206, X7R, 16V, 20%	C102, C305, U1, C305, U2, C306, U1, C306, U2, C500, C502	1206		C3216X7R1C106M	TDK		with same specifications	Digikey	445-1801-1-ND				1	7
100nF	MLCC, X7R, 50V, 10%, 0603, MLCC, X7R, 16V, 10%, 0603	C103, C104, C206, C207, C201, C209, C210, C211, C212, C213, C215, C300, U2, C302, U1, C302_U2, C308_U1, C308_U2, C310_U1, C310_U2, C316, U3, C316_U2, C411, C412	0603					with same specifications	Digikey					1	20
22pF	MLCC, C0G/NP0, 50V, 5%, 0603	C107	0603					with same specifications	Digikey					1	1
10nF	MLCC, X7R, 16V, 10%, 0603	C204, C205, C206	0603					with same specifications	Digikey					1	3
180pF	MLCC, X7R, 16V, 10%, 0603	C303, U1, C303_U2, C305, U1, C305_U2	0603					with same specifications	Digikey					1	4
270pF	MLCC, X7R, 16V, 10%, 0603	C304, U1, C304_U2	0603					with same specifications	Digikey					1	2
470uF/10V	63kΩ 10V, 20%, 2000hm/105deg	C311_U1, C311_U2, C410	D_Rad 1012		ERSM 470uF, 10V	Fistyl						Bürklin	1004226	1	3
820pF	MLCC, X7R, 16V, 10%, 0603	C312_U1, C312_U2	0603					with same specifications	Digikey					1	2
UUD1C101MCL1GS	Aluminum Electrolytic Capacitor, UD Series, Low Impedance, 100 uF, 16 V, +/- 20%, -55 to 105 degC, Chip Type, 8.3 x 5.8 mm D x L, Pb-Free, Reel	C313_U1, C313_U2, C401, C402, C406, C407	NIC-CAPA2-6.3X5.8_V												6
UUD1C220MCL1GS	Aluminum Electrolytic Capacitor, UD Series, Low Impedance, 22 uF, 16 V, +/- 20%, -55 to 105 degC, Chip Type, 5 x 5.8 mm D x L, Pb-Free, Reel	C317_U1, C317_U2, C318_U1, C318_U2	NIC-CAPA2-5X5.8_V												4
22nF	MLCC, X7R, 16V, 20%, 0603	C400, C405	0603					with same specifications	Digikey					1	2
6nF/8	MLCC, X7R, 16V, 10%, 0603	C403, C408	0603					with same specifications	Digikey					1	2
1nF	MLCC, X7R, 16V, 10%, 0603	C404, C409	0603					with same specifications	Digikey					1	2
4uF/16V	MLCC, 1206, X7R, 16V, 10%	C413	1206		C3216X7R1C475M/1.60	TDK		with same specifications	Digikey	445-1425-1-ND	mouser	810-C3216X7R1C475M-6	Farnell	1844320	1
22uF	MLCC, 1210, X7R, 16V, 20%	C501, C503	1210		EMK325B7226MM-TR	Taiyo Yuden		with same specifications	Digikey	587-2067-1-ND			farnell	1852665	2
0603, green	LED, 0603, 1.8V, 2.20mA	D200, D300	0603		SML-510MW7W	ROHM			Digikey	511-1313-1-ND	Mouser	755-SML-510MW7W	Farnell	1685079	2
BNC Jack THT, 90° TE-CON	BNC Jack THT, 90° TE-CON	J100, J102	1-1337494-0		1-1337494-0	TE-Connectivity			Farnell	1026958	Digikey	A97556-ND	Mouser	571-1-1337494-0	2
LUMBERG 50317	Lumber Connector, 3.5mm Stereo Audio Socket, Black	J101	150317												1
PEC12R-2120F-S0012	Rotary Encoder Quitkodure	J200	PEC12R-2		PEC12R-2120F-S0012	Bourns			Digikey	PEC12R-2120F-S0012-ND	Mouser	652-PEC12R-2120F-S12			1
10u, 0805	WE-MI, 0805, 10u, 2MHz, Q=50, I=15mA, RDC=1.0R	L200, L301, U1, L301, U2, L302, U1, L302, U2, L303, U1, L303_U2, L305, U1, L305_U2	0805		7447908	Wuerth			Wuerth	7447908				1	9
300R, 3A, 50mR	742792031L Ferrit bead, 300R@100MHz, 50mR, 3A, 0805	L201	0805		742792031	Wuerth			digikey	732-4638-1-ND	Mouser	710-742792031	farnell	1635734	1
1uHR, 10%	RF Inductor, 5.05 OHHz, 10%, LQW21HN / , 00 Series	L300_U1, L300_U2, L304_U1, L304_U2	0805		LQW21HNR10K03L	Murata			Digikey	490-13065-1-ND	Mouser	81-LQW21HNR10K03L			4
Header 3/G	Header, 3-Pin, single row Stiftleiste, RM 2.54mm, SMT	P100	HDR1X3-2.54		TSW-103-07-F-S	samtec			Samtec	TSW-103-07-F-S				1	1
Header 2/G	Header, 2-Pin, single row Stiftleiste, RM 2.54mm	P101	HDR1X2-2.54		TSW-102-07-F-S	samtec			Samtec	TSW-102-07-F-S				1	1
Header 4/G	Header, 4-Pin, Dual row Stiftleiste, RM 2.54mm	P200, P202	HDR1X4-2.54		TSW-104-07-F-S	Samtec		lotter ähnliche mechanische Bauform	samtec	TSW-104-07-F-S				1	2
Header 6/G	Header, 3-Pin, Dual row Stiftleiste, RM 2.54mm	P203	HDR2X3-2.54											1	1
DC-Barrel	Lumberg DC-Buchse 6,3-2,0mm	P500	161318		16 1318	Lumberg			Farnell	1308873	Reichelt	LUM 1613-18		1	1
BC847C,215	BC847C: IC 100MA, 12CE 45V, NPN Transistor	Q300_U1, Q300_U2	SOT23		BC847C,215	NXP			Diodes Inc.	BC847C-7-F	Digikey	568-1636-1-ND	Mouser	771-BC847C-T/R	Farnell	1081235	1	2
4k7	1%, 0.125W/0.063W, 50V, 0603	R100, R110, R208, R209, R304_U1, R304_U2, R400, R403, R404, R409, R410, R411	0603						Digikey					1	12
3R	1%, 0.125W/0.063W, 50V, 0603	R102, R105	0603						Digikey					1	2
3k	1%, 0.125W/0.063W, 50V, 0603	R103, R106, R107, R111	0603						Digikey					1	4
51R	1%, 0.125W/0.063W, 50V, 0603	R104	0603						Digikey					1	1
30R	1%, 0.125W/0.063W, 50V, 0603	R108, R109, R214	0603						Digikey					1	3
220R	1%, 0.125W/0.063W, 50V, 0603	R110, R300_U1, R300_U2, R405, R412	0603						Digikey					1	5
10k	1%, 0.125W/0.063W, 50V, 0603	R200_U1, R200_U2, R211, R216, R234, R304_U1, R304_U2, R400, R407, R408, R419	0603						Digikey					1	11
33R	1%, 0.125W/0.063W, 50V, 0603	R204, R210, R211, R212, R213, R216, R305_U1, R305_U2, R306_U1, R306_U2, R307_U1, R307_U2, R308_U1, R308_U2, R417, R418	0603						Digikey					1	16
0R0	1%, 0.125W/0.063W, 50V, 0603	R219	0603						Digikey					1	1
180R	1%, 0.125W/0.063W, 50V, 0603	R220, R503	0603						Digikey					1	2
330R	1%, 0.125W/0.063W, 50V, 0603	R303_U1, R303_U2, R500	0603						Digikey					1	3
2k2	1%, 0.125W/0.063W, 50V, 0603	R305_U1, R305_U2, R313_U1, R313_U2	0603						Digikey					1	4
22k	1%, 0.125W/0.063W, 50V, 0603	R310_U1, R310_U2, R312_U1, R312_U2	0603						Digikey					1	4
2k0	2k0 Potentiometer 64X, Cermet Model 23B	R311_U1, R311_U2	Model 23B		23BR2KLFTR	Cermet			Digikey	987-1592-1-ND	Reichelt	23B-2,0K		1	2
100k	1%, 0.125W/0.063W, 50V, 0603	R401, R406, R408, R413	0603						Digikey					1	4
100R	1%, 0.125W/0.063W, 50V, 0603	R414, R415, R420	0603						Digikey					1	3
680R	1%, 0.250W, 50V, 1206	R500, R501, R505	1206						Digikey					1	3
560R	1%, 0.125W/0.063W, 50V, 0603	R504	0603						Digikey					1	1
120R	1%, 0.125W/0.063W, 50V, 0603	R506	0603						Digikey					1	1
470R	1%, 0.125W/0.063W, 50V, 0603	R507	0603						Digikey					1	1
CXDS49LANL	Transformer 1:8	T100	CXDS49LANL		CXDS49LANL	Pulse			Digikey	553-2773-1-ND				1	1
LMH6643	Dual Opamp 130 MHz, 2.7V, 12.8 V	U100	SO-8		LMH6643MAX	Texas Instruments			Digikey	LMH6643MAXINOPBCT-ND	Mouser	926-LMH6643MAXINOPB	Farnell	2764710	1
DSC1001CI1-025.0000	Memo-XO, 25MHz, 1.7..3.6V, industriell, 4pin, 3.2 x 2.5 mm²	U101	3.2mm x 2.5mm		DSC1001CI1-025.0000	Microchip			Digikey	576-6953-5-N	Mouser	998-1001CI1-025.0000			1
ATSAM5D201I8A-MUT	SAM5D Arm®-based Microcontroller, 1.62 to 3.63 V, 256 KB Flash, 32 KB SRAM, -40 to 85 degC, 64-Pin QFN, RoHS, Tape and Reel	U200	QFN64-EP47_M												1
AD9837	AD9837 DDS, 1000 eDC	U200_U1, U200_U2	CP-10-9											1	2
SA612	Silver Cell Mixer -500 MHz	U301_U1, U301_U2	SO-8											1	2
TS972	Dual Opamp, 12MHz, 2.7V, 15V	U400	SO-8		TS972IDT	ST			Digikey	497-2317-1-ND	Mouser	511-TS972ID-TR		1	1
74HC4066PW	Quad analog switch, CMOS	U401	TSSOP-14		74HC4066PW	NXP		TI: CD74HC4066PWR	Digikey	568-1352-5-ND				1	1
LM1117_ADJ	Festspannungsregler	U500, U501	SOT223												2
Cortex Debug Connector SMD	Header, 5x2 pin, dual row stiftleiste, RM 1.27mm, SMD, Keying shroud, abgerundet	X200	FTSH-105-01-L-DV-K-A-P		FTSH-105-01-L-DV-K-A-P	samtec		lotter ähnliche mechanische Bauform	digikey	FTSH-105-01-L-DV-K-A-P-TR-ND	samtec	FTSH-105-01-L-DV-K-A-P		1	1
															205

Approved:

Notes: