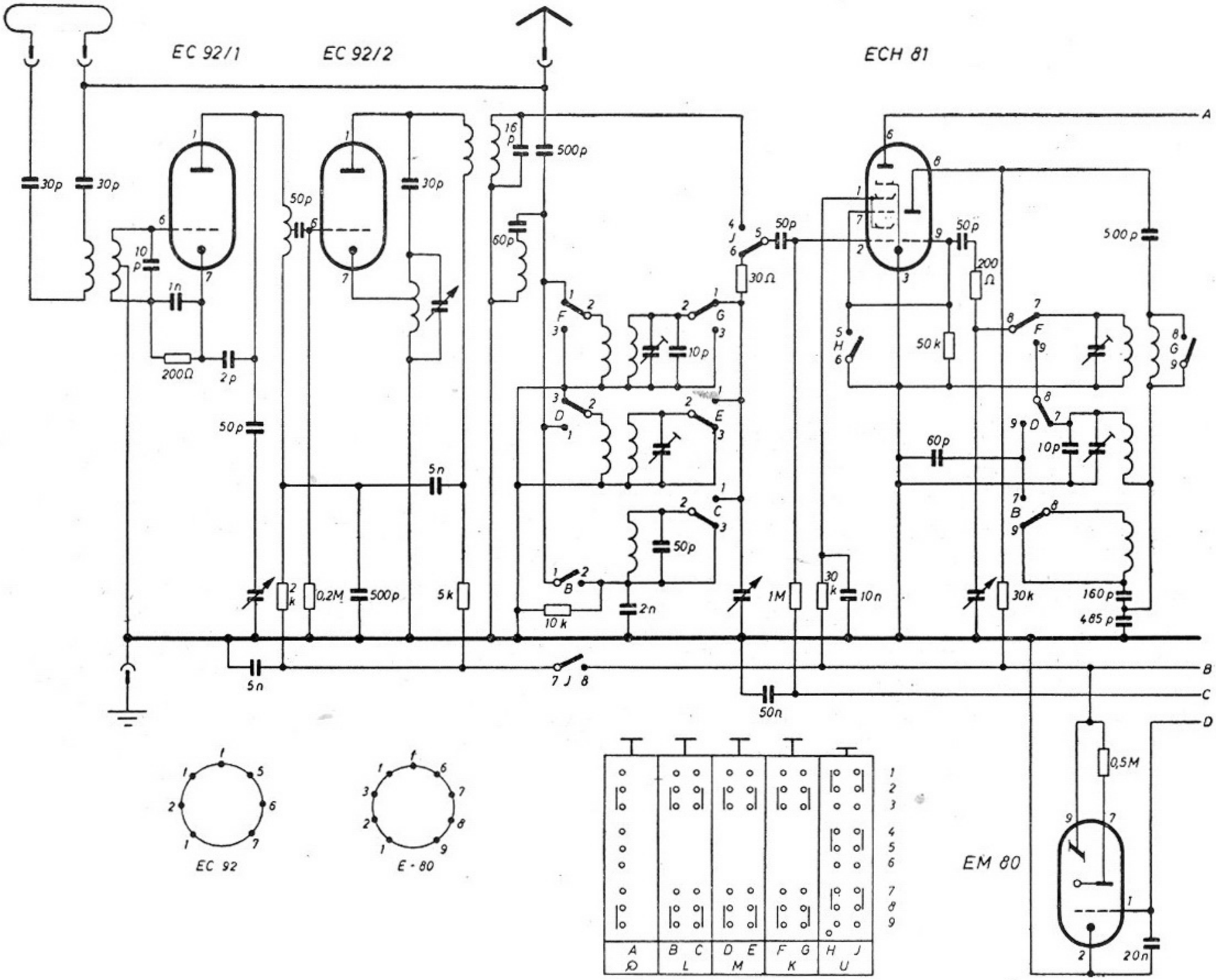

Operette 8-57W GFGF Archiv

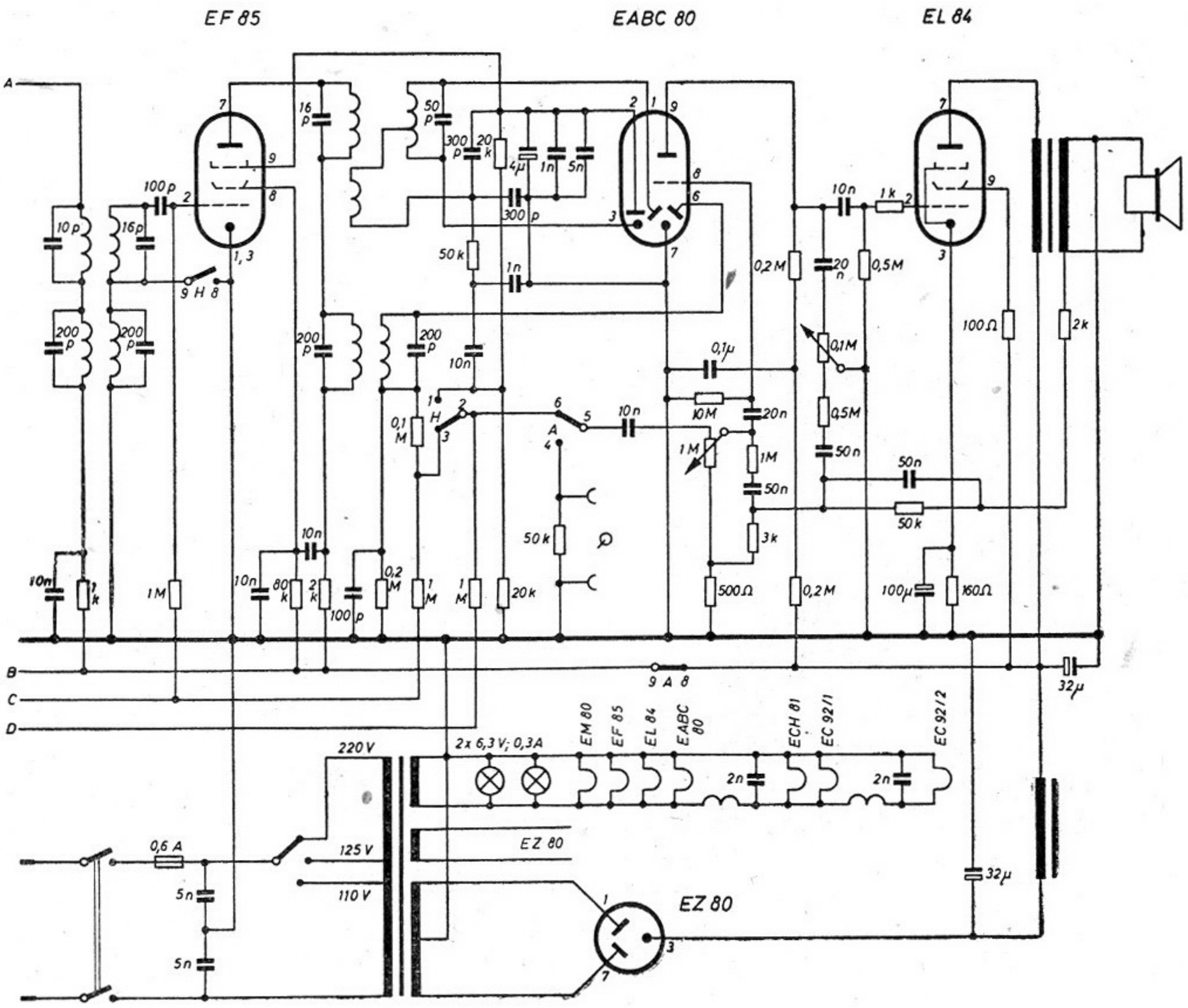

Operette 8-57W GFGF Archiv