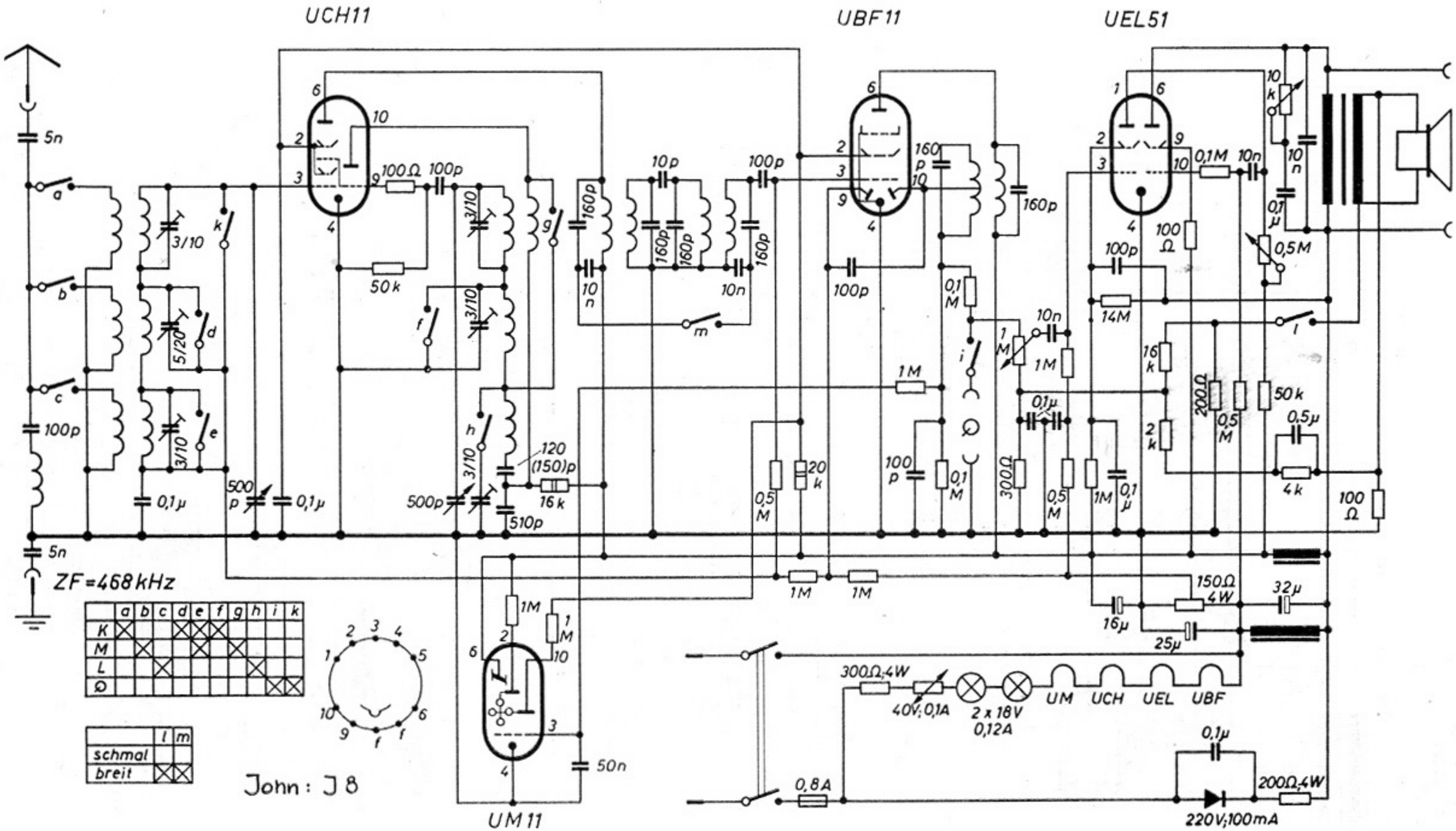

	a	b	c	d	e	f	g	h	i	k
K	X			X	X	X				
M		X			X		X			
L			X					X		
Ω									X	X

	l	m
schmal		
breit	X	X

J 8 GFGF Archiv